PoWer SAW 1000-1250

GeKaMac®

PoWer SAW 1000-1250

Users Manual

Please Read and Understand This Manual
Before Operating The Welding Machine

www.gedikwelding.com

This machine is for internal use only.

It complies with the WEEE Directive.

This machine has been designed in accordance with the EN 60974-1 and EN 60974-10 standards.

The machine is safe when installation, operation, and maintenance are performed in accordance with the user manual and regulations. The operator and machine owner are responsible for adhering to safety rules.

Gedik Kaynak San. Ve Tic. A.Ş. assumes no responsibility for safety or CE compliance if any modifications are made to the machine or if safety rules are not followed.

This Class A equipment is not suitable for use in homes and similar residential areas where the power supply is provided by the low-voltage public electricity network.

This machine is not household waste and cannot be disposed of in the trash.

When the machine reaches the end of its service life or becomes obsolete, it must be disposed of in accordance with regulations.

COMPLIES WITH THE WEEE DIRECTIVE.

Eco Design Statement

This machine has been designed and manufactured in accordance with the requirements of the 2009/125/EC Eco Design Directive concerning the environmentally friendly design of energy-related products.

Accordingly, machines with an idle mode are as follows.

	Idle Mode
MMA	**X**
MIG	√
TIG	√
Plazma	√
SAW	**Out of Scope**

Efficiency measurements should be conducted only on the power unit. The water cooling system should be disabled. For more information on measurements and machine settings, Gedik Kaynak Sanayi ve Ticaret A.Ş. should be consulted.

AT UYGUNLUK BEYANI

EU DECLARATION OF CONFORMITY

Bu uygunluk beyanı yalnızca imalatçının sorumluluğu altında düzenlenir.

This declaration of conformity is issued under the sole responsibility of the manufacturer.

İstanbul, Turkey, 08.03.2024

İmalatçı / Manufacturer

GEDİK KAYNAK SANAYİ ve TİCARET A.Ş.

Ankara Cad. No.306 Seyhli Pendik ISTANBUL TURKIYE

Ürün / Product	ARC WELDING MACHINE
Marka-Model / Brand- Model	POWER SAW 1000

Yukarıda tanımlanan beyanın nesnesi ilgili uyumlaştırılmış AB mevzuatı ile uyumludur.

The object of the declaration described above, is in conformity with the relevant union harmonisation legislation.

Direktifler / Directives	2014/30/EU & 2014/35/EU

Uyumlaştırılmış standartlar ve uygunluğun deklare edilmesiyle ilişkili diğer referanslar.

References to the relevant harmonised standarts used and references to the other technical specifications in relation to which conformity is declared.

EN IEC 60974-1:2018+A1:2019
EN 60974-10:2014+A1:2015

Bu ekipman, talimatlara uygun kurulduğunda, bakımı yapıldığında ve kullanıldığında belirtilen standartlara uygundur. Makine üzerinde bir değişiklik yapıldığında veya yanlış kullanımda deklarasyon geçersiz olur.

The equipment is in compliance with pertinent legislation when installed, utilized, and maintained in accordance with the enclosed instructions. This declaration will be invalid under any modification or improper use.

İmalatçı Adına imzalayan / Signed for and on behalf of:

Hatice Özel, Equipment Business Unit Director

AT UYGUNLUK BEYANI

EU DECLARATION OF CONFORMITY

Bu uygunluk beyanı yalnızca imalatçının sorumluluğu altında düzenlenir.

This declaration of conformity is issued under the sole responsibility of the manufacturer.

İstanbul, Turkey, 08.03.2024

İmalatçı / Manufacturer

GEDİK KAYNAK SANAYİ ve TİCARET A.Ş.

Ankara Cad. No.306 Seyhli Pendik ISTANBUL TURKIYE

Ürün / Product	ARC WELDING MACHINE
Marka-Model / Brand- Model	POWER SAW 1250

Yukarıda tanımlanan beyanın nesnesi ilgili uyumlaştırılmış AB mevzuatı ile uyumludur.

The object of the declaration described above, is in conformity with the relevant union harmonisation legislation.

Direktifler / Directives	2014/30/EU & 2014/35/EU

Uyumlaştırılmış standartlar ve uygunluğun deklare edilmesiyle ilişkili diğer referanslar.

References to the relevant harmonised standarts used and references to the other technical specifications in relation to which conformity is declared.

EN IEC 60974-1:2018+A1:2019
EN 60974-10:2014+A1:2015

Bu ekipman, talimatlara uygun kurulduğunda, bakımı yapıldığında ve kullanıldığında belirtilen standartlara uygundur. Makine üzerinde bir değişiklik yapıldığında veya yanlış kullanımda deklarasyon geçersiz olur.

The equipment is in compliance with pertinent legislation when installed, utilized, and maintained in accordance with the enclosed instructions. This declaration will be invalid under any modification or improper use.

İmalatçı Adına imzalayan / Signed for and on behalf of:

Hatice Özel, Equipment Business Unit Director

Safety Rules

“Danger” indicates an imminently hazardous situation which, if not avoided, will result in death or serious injury.

“Warning!” indicates a possible hazardous situation which, if not avoided, could result in death or serious injury. The possible hazards are explained in the text.

“Caution” indicates a possible hazardous situation which, if not avoided, may result in slight or moderate injury.

“Note!” indicates a situation which implies a risk of impaired welding result and damage to the equipment.

“Important!” indicates practical tips and other useful special-message. It is no signal word for a harmful or dangerous situation.

Utilisation for intended purpose only

- The machine may only be used for jobs as defined by the “Intended purpose”.
- Utilisation for any other purpose, or in any other manner, shall be deemed to be “not in accordance with the intended purpose”. The manufacturer shall not be liable for any damage resulting from such improper use.

Safety signs

- All the safety instructions and danger warnings on the machine must be kept in legible condition, not removed, not be covered, pasted or painted cover.

Safety inspection

- The owner/operator is obliged to perform safety inspection at regular intervals.
- The manufacturer also recommends every 3-6 months for regular maintenance of power sources.

Electric shock can kill

- Touching live electrical parts can cause fatal shocks or severe burns. The electrode and work circuit is electrically live whenever the output is on. The input power circuit and machine internal circuits are also live when power is on. In MIG/MAG welding, the wire, drive rollers, wire feed housing and all metal parts touching the welding wire are electrically live. Incorrectly installed or improperly grounded equipment is a hazard.
- Do not touch live electrical parts of the welding circuit, electrodes and wires with your bare skin or wet clothing.
- The operator must wear dry hole-free insulating welding gloves and body protection while performs the welding.
- Insulate yourself from work and ground using dry insulating protection which is large enough to prevent you full area of physical contact with the work or ground.
- Connect the primary input cable according to rules. Disconnect input power or stop machine before installing or maintenance.
- If welding must be performed under electrically hazardous conditions as follow: in damp locations or wearing wet clothing; on metal structures such as floors, gratings, or scaffolds; when in cramped positions such as sitting, kneeling, or lying; or in occasion when there is a high risk of unavoidable or accidental contact with the work piece or ground. Must use additional safety precautions: semiautomatic DC constant voltage (wire) welder, DC manual (Stick) welder and AC welder with reduced open-load voltage.

- Maintain the electrode holder, ground clamp, welding cable and welding machine in good, safe operating condition. Replace damaged part immediately.

Electric and magnetic fields (EMF) may be dangerous

- If electromagnetic interference is found to be occurring, the operator is obliged to examine any possible electromagnetic problems that may occur on equipment as follow:

- minas, signal and data-transmission leads

- IT and telecoms equipment

- measurement and calibration devices

- Wearers of pacemakers

- Measures for minimizing or preventing EMC problems:

– Mains supply

If electromagnetic interference still occurs, despite the fact that the mains connection in accordance with the regulations, take additional measures

– Welding cables

Keep these as short as possible

Connect the work cable to the work piece as close as possible to the area being welded.

Lay tem well away from other cables.

Do not place your body between your electrode and work cables.

– Equipotential bonding

– Workpiece grounding (earthing)

– Shielding

Shield the entire welding equipment and other equipment nearby.

ARC rays can burn

- Visible and invisible rays can burn eyes and skin.

- Wear an approved welding helmet or suitable clothing made from durable flame-resistant material (leather, heavy cotton, or wool) to protect your eyes and skin from arc rays and sparks when welding or watching.

- Use protective screens or barriers to protect other nearby personnel with suitable, non-flammable screening and/or warn them not to watch the arc nor expose themselves to the arc rays or to hot spatter or material.

Fumes and gases can be dangerous

- Welding may produce fumes and gases, breathing these fumes and gases can be hazardous to your health.

- When welding, keep your head out of the fume. If inside, ventilate the area at the arc to keep fumes and gases away from the breathing zone. If ventilation is not good, wear an approved air-supplied respirator.

- Work in a confined space only if it is well ventilated, or while wearing an air-supplied respirator.

- Welding fumes and gases can displace air and lower the oxygen level causing injury or death. Always use enough ventilation, especially in confined areas, to insure breathing air is safe.

Welding and cutting sparks can cause fire or explosion

- When not welding, make sure the electrode circuit is not touching the work or ground. Accidental contact can cause sparks, explosion, overheating, or fire. Make sure the area is safe before doing any welding.
- Welding and cutting on closed containers, such as tanks, drums, or containers, can cause them to blow up. Make sure proper steps have been taken.
- When pressure gas is used at the work site, special precautions are required to prevent hazardous situations.
- Connect work cable to the work as close to the welding zone as practical to prevent welding current from passing too long and creating fire hazards or overheat.
- Wear oil-free protective garments such as leather gloves, heavy shirt, cuffless trousers, high shoes, and a cap. Wear ear plugs when welding out of position or in confined places. Always wear safety glasses with side shields when in a welding area.
- Be attention that welding sparks and hot materials from welding can easily go through small cracks and openings to adjacent areas and start a fire. Remove fire hazardous from the welding area, if not possible, cover them thoroughly. Do not weld where flying sparks can strike flammable material and where the atmosphere may contain flammable dust, gas, or liquid vapors (such as gasoline).
- Protect yourself and others from flying sparks and hot metal. Remove any combustibles from operator before perform any welding.
- Keep a fire extinguisher readily available.
- Empty containers, tanks, drums, or pipes which have combustibles before perform welding.
- Remove stick electrode from electrode holder or cut off welding wire at contact tip when not in use.
- Apply correct fuses or circuit breakers. Do not oversize or bypass them.

Cylinder can explode if damaged

- Pressure gas cylinders contain gas under high pressure. If damaged, a cylinder can explode. Since gas cylinders are normally part of the welding process, be sure to treat them carefully.
- Cylinders should be located away from areas where they may be struck or subjected to physical damage. Use proper equipment, procedures, and sufficient number of persons to lift and move cylinders.
- Always install cylinders in an upright position by securing to a stationary support or cylinder rack to prevent falling over or tipping.
- Keep a safe distance from arc welding or cutting operations and any other source of heat, sparks, or flame.
- No touching cylinder by welding electrode, electrode holder or any other electrically “hot” parts. Do not drape welding cables or welding torches over a gas cylinder.
- Use only correct compressed gas cylinders, regulators, hoses, and fittings designed for the process used; maintain them and associated parts in good condition.
- Use only compressed gas cylinders containing the correct shielding gas for the and properly operating regulators designed for the gas and pressure used. All hoses, fittings, etc. should be suitable for the application and maintained in good condition.
- Open the cylinder valve slowly and keep your head and face away from the cylinder valve outlet.
- Valve protection caps should be kept in place over valve expect when the cylinder is in use or connected for use.

Hot parts can burn

- Do not touch hot parts with bare hand or skin.

- Ensure equipment is cooled down before perform any work.
- If touching hot parts is needed, use proper tools and/or wear heavy, insulated welding gloves and clothing to prevent burns.

Flying metal or dirt can injure eyes

- When welding, chipping, wire brushing, and grinding can cause sparks and flying metal. It can hurt your eyes.
- Remember wear appropriate safety glasses with side shields when in welding zone, even under your welding helmet.

Noise can damage hearing

- Noise from some processes or equipment can damage hearing.
- Remember wear approved ear protection to protect ears if noise level is high.

Moving parts can injure

- Stay away from moving parts such as fans.
- Stay away from pinch points such as drive rolls.
- Keep all doors, panels, covers, and guards closed and securely in place.
- Have only qualified persons remove doors, panels, covers, or guards for servicing and maintenance.
- Reinstall doors, panels, covers, or guards when servicing and maintenance is finished and before reconnecting input power.

Overuse can cause overheating

- Use machine follow duty cycle. Reduce current or reduce duty cycle before starting to weld again.
- Allow cooling period.
- Do not block or filter airflow to unit.

Static can damage PCB

- Always wear wrist straps before touching PCB or parts.
- Use proper static-proof bags and package to store or move PCB.

Safety markings

- Equipment with CE-markings fulfils the basic requirements of the Low-Voltage and Electromagnetic Compatibility Guideline (e.g. relevant product standards according to EN 60 974).

Safety markings

- The equipment with the CCC mark meets the basic requirements stipulated in the Chinese standards GB / T15579.1-2013 and GB / T8118.

Safety markings

- This marking means that the product is certified for both the U.S. and Canadian markets, to the applicable U.S. and Canadian standards. The preferred location of the indicators is as shown.

Contents

1- GENERAL REMARKS....9

1-1 Power source features....9

1-2 Functional principle....9

1-3 Output characteristics....10

1-4 Duty cycle....11

1-5 Applications....12

1-6 Warning label....11

2-VERSIONS BRIEFS....13

3-BEFORE COMMISSIONING....13

3-1 Utilization for intended purpose only....13

3-2 Machine installation rules....13

3-3 Power source connection....14

3-4 Welding cables instruction....14

4 – POWER SAW1000/1250....15

4-1 System components....15

4-2 Basic equipments for welding....16

4-3 Control panel....16

4-4 Interface....19

4-5 Submenu....21

4-6 Installation....23

4-7 welding process installation....25

4-8 Technical data....26

4-9 Dimension....27

4-10 Disassembly and reassembly....28

5-TROUBLE SHOOTING....34

6-CARE AND MAINTENANCE....41

7-BASIC WELDING TECHNIQUE 42

7-1 SAW basic welding technique 42

7-2 SMAW (Stick) welding technique 47

7-3 GOUGING welding technique guide 50

1- GENERAL REMARKS

This series power supply applies IGBT soft switch technology, enjoy reasonable static characteristic and sound dynamic characteristic. The power sources have high reliability of anti-fluctuation of power grid and perfect welding performance, is new type of high-efficiency energy-saving equipment.

1-1 Power source features

Highlights as follows:

-MCU control technology, realize digital control of welding process, improve control precision and lower failure rate;

-Apply IGBT soft switch inverter technology, ensure a highly stable welding current against the fluctuation of network - voltage and changes in arc length, arc has strong self- adjustment ability;

-High successful rate of arc starting;

-Drooping & flat characteristic ;

-It can perform carbon arc air gouging and SMAW welding mode;

-Wide range of current adjustment;

-Small size, light weight, flexible adjustment and convenient operation;

-High power factor, high-efficiency, energy-saving equipment.

.

1-2 Functional principle

This series of power sources adopt IGBT soft switchinverter technology to improvethe dynamic response rate and make the machines with small size and light weight. The control circuit's closed-loop control makes the power source enjoy strong ability against power grid fluctuation and perfect welding performance.

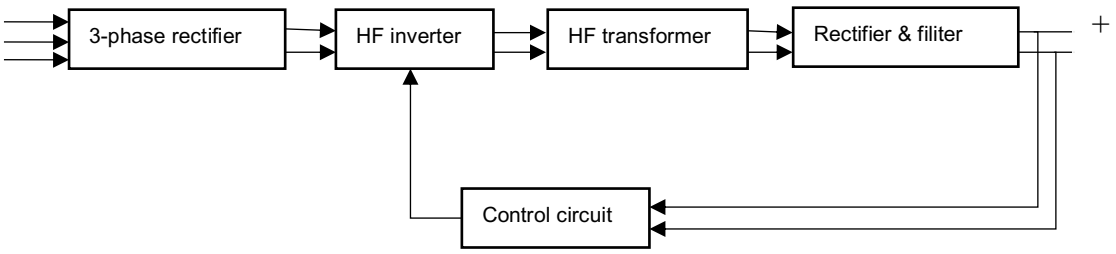

Fig.1-2-1: Schematic diagram

1-3 Output characteristics

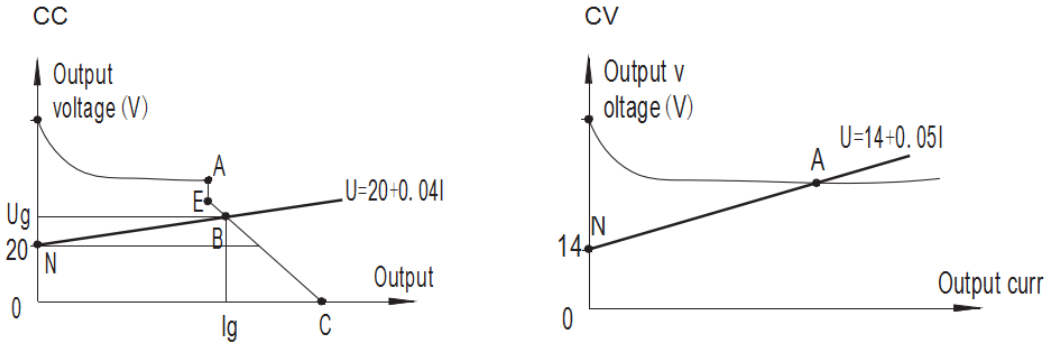

Fig.1-3-1: SAW mode volt-ampere curve

1.Volt-Ampere curve illustration on SAW mode

SAW has flat characteristic and droop characteristic:

Droop characteristic:

M-A-D-C is Volt-Ampere static curve on SAW mode;

N-B is load curve;

Welding current is in accordance with the distance between B and ordinate axis.

Flat characteristic :

M-A is Volt-Ampere static curve on SAW mode;

N-B is load curve;

Welding voltage is in accordance with the distance between A and abscissa axis.

2. Volt-Ampere curve illustration on SMAW mode

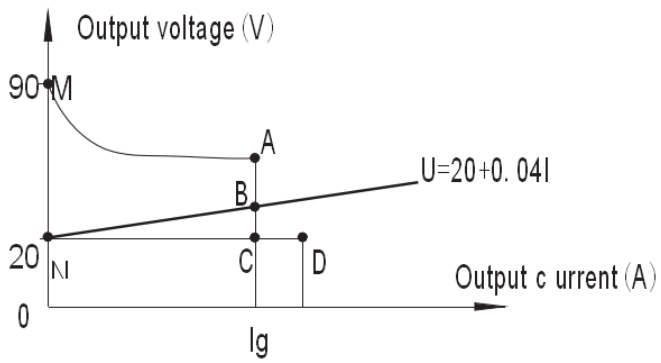

Fig.1-3-2: SMAW mode volt-ampere curve

M-A-B-C-D is Volt-Ampere static curve on SMAW mode;

N-B is load curve;

Welding current is in accordance with the distance between B and ordinate axis;

Arc force current is in accordance with the distance between C and D in the Volt-Ampere curve.

1-4 Duty cycle

Duty cycle is percentage of 10 minutes that a machine can weld at rated load without overheating. If overheats, thermostat(s) will open, output stops. Wait for fifteen minutes for the machine to cool down. Reduce amperage or duty cvcle before welding.

Note! Exceeding duty cycle can damage the machine and greatly reduce its lifespan.

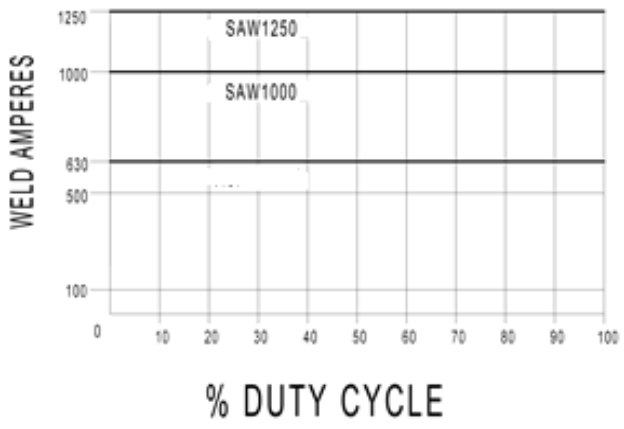

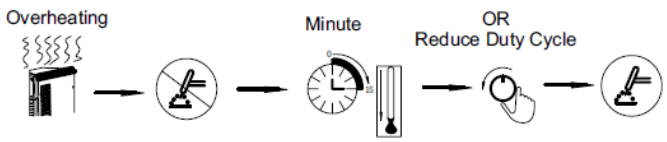

Fig.1-4-1: Duty cycle

1-5 Applications

Suitable for welding: carbon structural steel, stainless steel, heat resistant steel, and alloy steel.

The power source is designed for the following recommend areas:

-Vehicle manufacturing

-Chemical container manufacture

-Boiler pressure vessel manufacture

-Shipbuilding and offshore engineering

-Electric power construction

-Crane industry

-Mechanical industry

-Other industries

1-6 Warning label

The warning label is affixed on the top of machine.

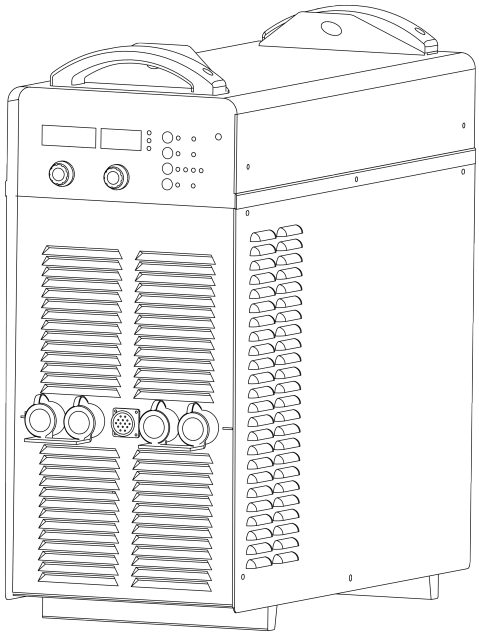

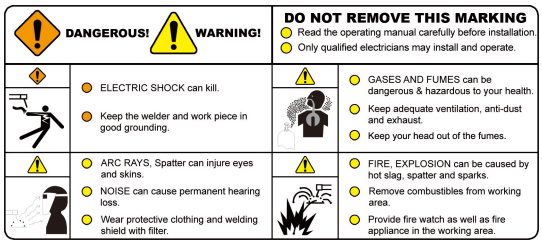

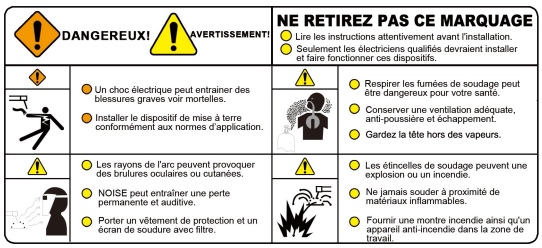

Fig. 1-6-1: Warning label

2-VERSIONS BRIEFS

Professional welding of special materials requires special welding parameters. Different models of the power sources are matched to different welding.

- **POWER SAW1000/1250**

  The power sources have logical arranged control panel for convenient operation, which can perform SAW, SMAW and Gouging. Welding cable can be extended to 50m. Double circuit, droop and flat characteristics.

.

3-BEFORE COMMISSIONING

Warning! Operating the equipment incorrectly can cause seriousinjury and damage. Do not use the functions described here until you have read and completely understood “safety rules”.

3-1 Utilization for intended purpose only

The power source may only be used for SAW, SMAW and GOUGING, Utilization for other purposes, or in any other manner, shall be deemed to be "not in accordancewith the intended purpose". The manufacturer shall not be liable for any damageresulting from such improper use.Operate, inspect and maintain should follow all the instructions given in thismanual.

3-2 Machine installation rules

According to test, protection degree of this power source is IP21S. However, the internal key components must be protected from direct soaking.

Warning! A machine that topples over or falls from its stand can cause injury. Place equipment on an even, firm floor in such a way that it stands firmly.

The venting duct is very important for safety protections. When choosing the machine location, make sure it is possible for the cooling air to freely enter and exit through the louvers on the front and back of machine. Anyelectroconductivemetallic dust like drillings must not be allowed to get sucked into themachine.

3-3 Power source connection

- The power source is designed to run on the voltage given on the nameplate.

- The mains cables and plugs must be mounted in accordance with the relevanttechnical standards.

- The power supply sockets that come with power source are designed to use strictlyaccording to the marked voltages.

Note!Inadequately dimensioned electrical installations can lead to serious damage. The mains lead, and its fuseprotection, must be dimensioned in accordance with the local power supply. The technical data shown on thenameplate shall apply.

3-4 Welding cables instruction

When welding, please pay attention to the followings:

a. The welding cables should be kept as short as possible;

b. If extended cable is used, please do as shown in Fig. 3-4-1.

Wrong Coil the excess ground cable and weldingcable in same direction respectively.	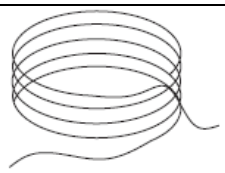
Correct Straighten the ground cable and weldingcable and make them close to each other. Bundle the ground cable and welding cabletogether, running the wires close to theground.	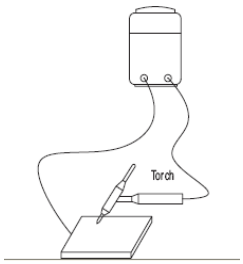

Correct	
When the excess cables are only be used byrolling up, coil the cables to two windings inreverse direction and overlap them. The number of turns for A is same as thenumber for B. Handle the welding cable and ground cableaccording to above-mentioned method.	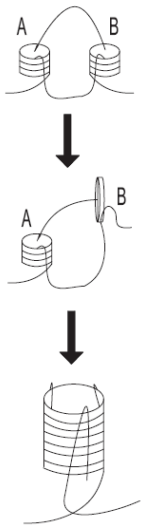

Fig. 3-4-1: Welding cables instruction

4 – POWER SAW 1000/1250

4-1 System components

SAW1000/1250 can be equipped with many different accessories and can be used in different special sites with different configurations.

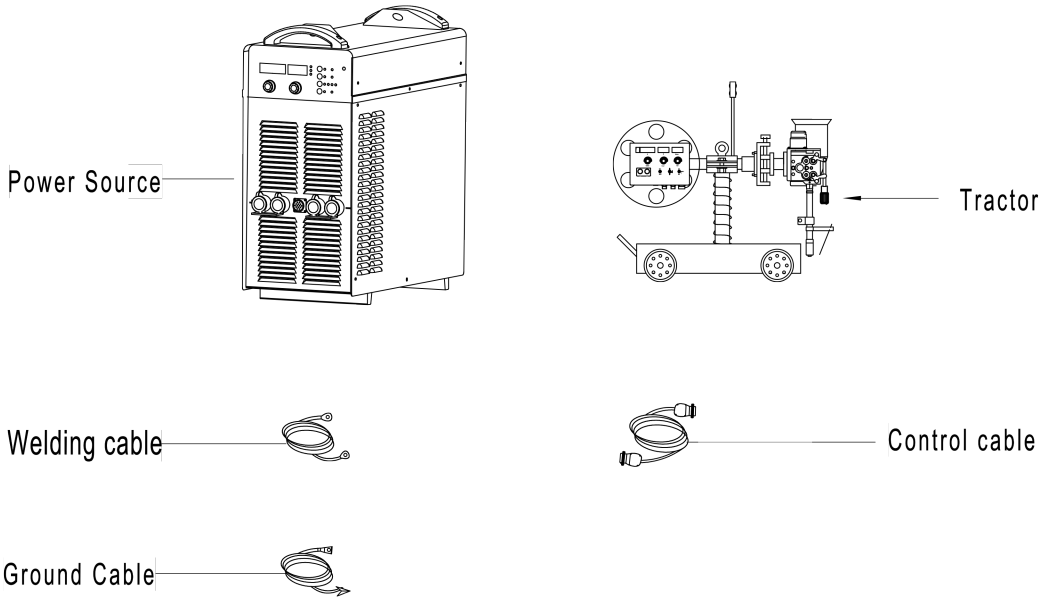

Fig. 4-1-1: System components

4-2 Basic equipments for welding

Only be equipped with the necessary accessories, can the power source MIG-M operate well. The following is the needed accessories list.

SAW welding

- Power source
- Ground cable
- Welding cable
- Control cable
- SAW tractor
- Wire
- Flux

GOUGING cutting

- Power source
- Ground cable
- Gouging torch
- Carbon rod
- Air compressor

SMAW welding

- Power source
- Ground cable
- Electrode holder
- Electrode

4-3 Control panel

The functions on the control panels are all arranged in a very logical way. The various modes and parameters needed for welding are easy to selectby pressing the appropriate button; parameters are easy to be adjusted by rotating encoder. Synergic adjustment makes the complicated operation much easier.

Note! Some described parameters in this manual may be slightly different from the power source, some identification may be slightly different from power source identification, but the manner of working is the same.

Warning! Operating the equipment incorrectly can cause serious injury and damage. Do not use the functions described here until you have read and completely understood all content of this manual.

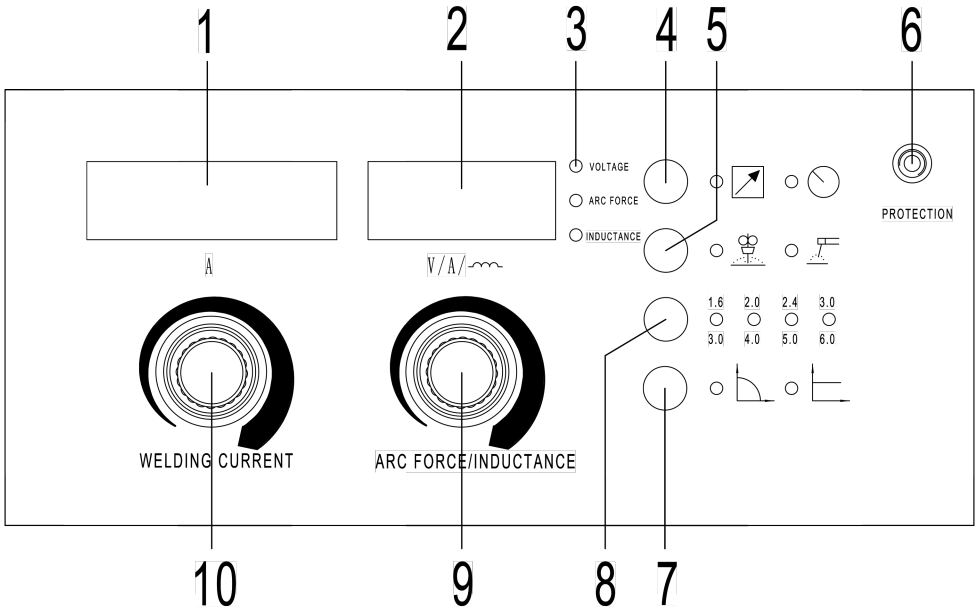

Fig. 4-3-1: Control panel

1. “Amp” displayer

The preset current value is displayed in the standby state; the actual value of the welding current is displayed in the welding state. Fault code displayed when the welder failsWhen the welding machine is in CC mode, adjust the "welding current / standard correction" knob to display the welding wire reference speed.

2.Arc voltage/ Arc force/ Inductance displayer

During SAW mode

On open-load mode, display the preset voltage value of welding machine; when welding, display real voltage value of welding machine; adjust inductance adjustment knob when on flat(CV) characteristic, display preset inductance value

shortly.Adjust the "welding current adjustment knob" during submerged arc welding with flat characteristics to display the wire feed speed offset coefficient.

-During SMAW/GOUGING mode

On open-load mode, display open circuit voltage of welding machine; adjust arc force adjustment knob, display preset arc force value shortly.

3.Voltage/ Arc force / Inductance indicator

Indicate whether arc voltage/arc force current/ inductance displayer displays welding voltage, arc force current or inductance.

4. “Remote /Panel control” button

Remote control mode ↗, adjust welding current by SAW tractor control box;

Panel control mode ⊘, adjust welding current on the welding machine control panel.

5. “SMAW / SAW” button

Position (SMAW), SMAW or Gouging mode;

Position (SAW), SAW mode.

6.Over-load protector

When the armature current of the wire feed or carriage motor and the excitation current of the wire feed motor are too large, the overload protector turns off, the welding machine stops working, the control box is powered off, and the welding machine displays E43 failure; when the motor and connection failure are eliminated After pressing and restoring the overload protector, the welder can continue to work.

7.Droop/ Flat characteristic button

-Position “ ” (droop characteristic), when on SAW welding, output characteristic of welding machine is droop characteristic;

-Position “ ” (flat characteristic), when on SAW welding, output characteristic of welding machine is flat characteristic.

8.Welding wire selection

Select according to welding wire specification.

Position “ “(drop characteristic), select thick wire with diameter Φ3, Φ4, Φ5, Φ6;

Position ‘ ” (flat characteristic), select thin wire with diameter Φ1.6, Φ2, Φ2.4, Φ3.

Note: The wire diameter indicator flashes, representing the wire diameter corresponding to the number above the selected indicator.

The wire diameter indicator is always on, which means the diameter of the wire corresponding to the number under the selected indicator.When the welding wire diameter is switched, the voltage digital display of the welding machine displays the welding wire diameter for a short time.

With Strip welding, the wire selection function fails, and the indicator light is fixed at Φ3.0.

9.Arc force/ Inductance adjustment knob

During SMAW mode , adjust arc force current;

During SAW, flat characteristic mode, adjust inductance. This can change the welding stability and the depth of molten pool.

10.Welding current adjustment knob

When in “Panel Control”, adjust the welding current.

Adjust the preset current value when panel control, the adjustment range is 60 to the maximum current.

During submerged arc welding drop characteristic welding, if the actual voltage deviates too much from the voltage preset value, adjust this knob to reduce the voltage deviation.

During submerged arc welding flat characteristic welding, if the actual current deviates too much from the current preset value, adjust this knob to reduce the current deviation.

4-4 Interface

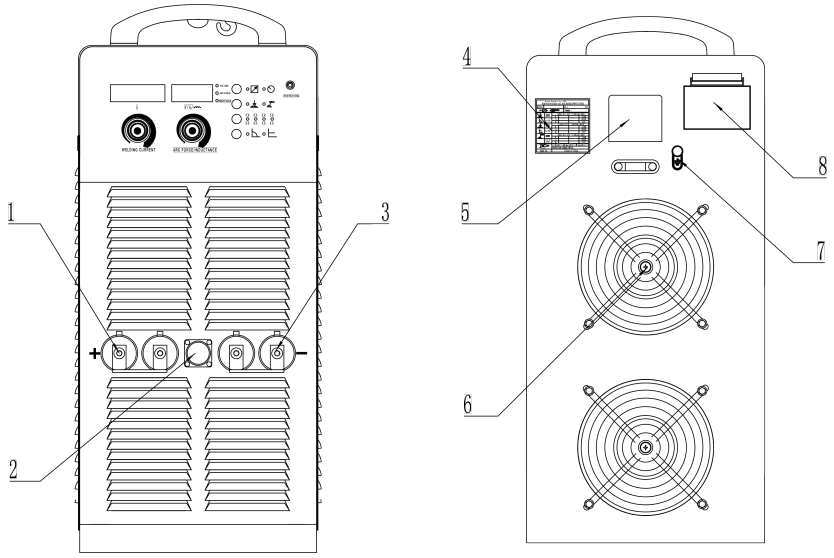

Fig. 4-4-1: interface

1.Positive output terminal (+)

SAW mode: connect with SAW tractor by welding cable (+); SMAW mode: connect with electrode holder;

GOUGING: connect with gouging torch.

2.Control socket

Connect with tractor control box by control cable, provide power supply for tractor control box, transmit control signal and feedback arc voltage.

Table. 4-4-1: Wire feeder control socket

3.Negative output terminal (-)

Connect with work piece by ground cable.

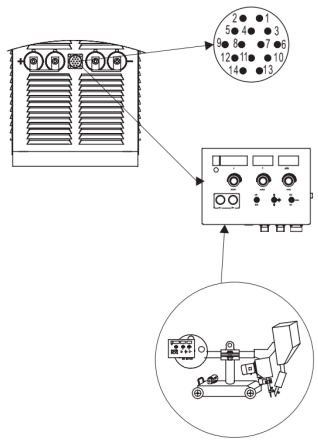

Socket pin	Description
1~2	Wire feeding motor armature
3~4	Tractor travelling motor armature
5~6	Wire feeding motor excitation
7	SAW arc voltage signal (get from the tractor head)
8~11	485 communication signal between welding machine and the tractor
12~14	Null

4.Nameplate

5.Power cord connecting box

For connecting AC 3-phase power supply.

6.Fan

Cool down the heat components in the welding machine.

7.Earthing bolt

To ensure operators not being harmed and welding machine working normally, make sure the earthing bolt is grounded firmly by ground cable.

8.Circuit breaker

The function of circuit breaker is to protect welding machine and operator by automatic trip to turn-off power

supply when overload or short circuit happens to the power source. Normally, the switch flipped to upward means power-on. To start or stop the welding machine is done by the mains switch in the distribution box. Please do not

take this circuit breaker as the power switch.

4-5 Submenu

Sub-menu parameters table

Item	description	Setting range(A)	Factory setting	Remarks
P00	Strike current	50 ~ 640/1010/1260A	640/1000A	When the success rate of arc starting is low, the arc starting current can be increased
P03	Crater current	50 ~ 640/1010/1260A	300A	Filling crater current
P04	Crater voltage	200 ~ 500 (mean 20 ~ 50V)	300(30V)	Filling crater voltage
P05	Crater time	OFF ~ 100 (mean 0 ~ 10 sec)	OFF(0sec)	After pressing the stop button, the welding machine and wire feeder continue to work. If there are craters at the end of welding, the crater time can be increased.
P06	Burn back time	OFF ~ 200 (mean 0 ~ 2 sec)	100（1sec）	Press the stop button, after the wire feeder stops working, the welding machine continues to work. If the welding wire sticks to the workpiece at the end of welding, the burn back time can be increased.
P08	Manual wire drawing&feed speed	10 ~ 250	60	The larger the value of this parameter, the faster the speed
P09	Slow wirefeeding speed	1 ~ 200	16	The larger the value of this parameter, the faster the speed
P12	ModBus IP address	OFF ~ 100	OFF	The welding machine as a slave machine communicates with external devices via ModBus. This parameter is the address of the welding machine. If ModBus communication is not used, adjust this parameter to OFF
P16	Broken wire voltage feedback line detection	ON/OFF	ON （detection）	Choose whether to detect the breakage of the feedback line of the machine head. If there is a fault, E18

				will be reported. The parameter ON means detection, and the parameter OFF means no detection.
P30	SAW:CC characteristic selection	1 ~ 10	6	According to the needs of the site, choose different CC welding characteristics
P40	Wire feed motorType selection	2600/6000	2600	According to different wire diameter, choose 2600/6000 rpm motor
P54	WMMS selection	ON/OFF	OFF(disable)	If there is a group control device, open the group control communication, the parameter is ON for enable, OFF for disable
P99	Restore to factory setting	ON/OFF	OFF	Under this parameter, press the welding current knob for two seconds, the display changes from OFF to ON, and all parameters and settings are restored to the factory default values

Table. 4-5-1: Submenu parameters

Sub-menu setting

enter the sub-menu: In the standby state, select local control, and simultaneously press and hold the welding current (left knob) and arc-force current(right knob) knobs on the front panel of the welding machine for 2 seconds.

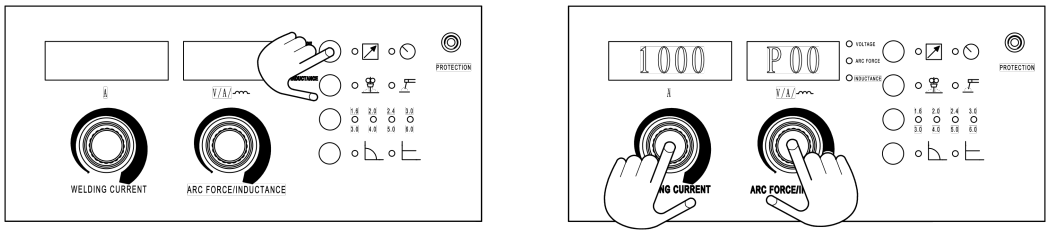

Fig. 4-5-1: enter the submenu

Parameter adjustment: Turn the Arcforce knob to select the P parameter, and turn the current knob to adjust the value of the parameter.

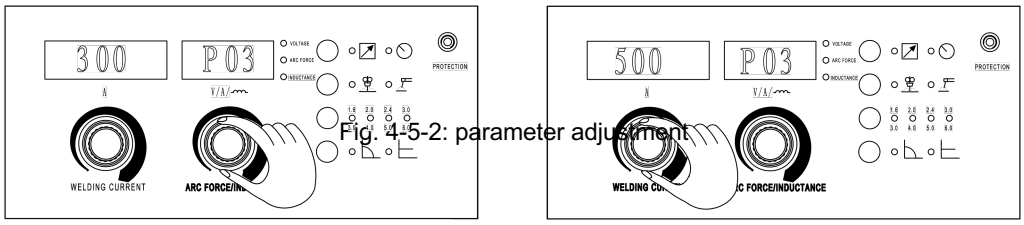

Fig. 4-5-2: parameter adjustment

Exit sub-menu: In the sub-menu interface, do not take any action, wait 5 seconds, exit submenu.

4-6 Installation

Warning! An electric shock can be fatal. If the machine is plugged intothe mains electricitysupply during installation, there is high risk of very serious injury and damage. Do not use the functions described here until you have read and completely understood “safety rules” in thebeginning.Only carry out work on the machine when

- the mains switch is on turn-off position,
- the machine is unplugged from the mains.

● Installation of the system components

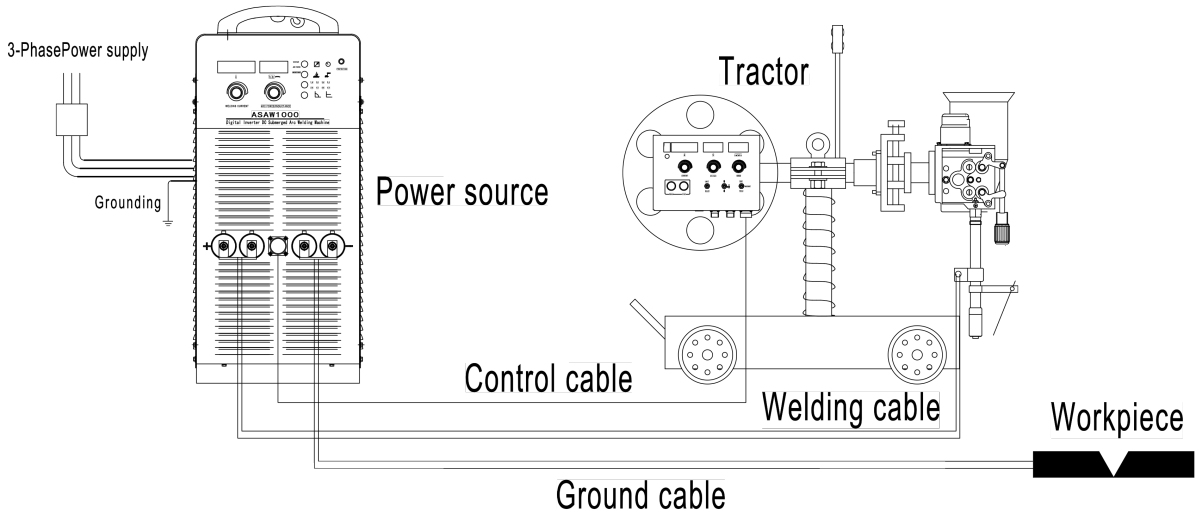

Fig. 4-6-1: Installation of the system components

● Installation environment requirements

1. It should be placed indoors without direct sunlight, rainproof, low humidity and less dust. The ambient air temperature range is -10℃~+40℃.

2. The inclination to the ground should not exceed 10°.

3. There should be no wind in the welding station, if any, it should be covered.

4. The welding machine is more than 20cm away from the wall, and the distance between the welding machine is more than 10cm.

5. When using water-cooled welding torch, pay attention to anti-freezing.

● power supply and cable requirement

Please note the size of fuse and circuit breaker in the table below are for reference only.

Note! Welding machine must be taken special design if it is powered by generator, please contact with manufacturer if you have such needs.

● **connections of Power cord and distribution box**

Warning! -Avoid hot-line work

- Operating by professional electrician

- Avoid connecting two power sources to one breaker

Model		1000		1250
Power supply		3~AC380V/400V/415V/440V±10%, 50Hz		
Min. power capacity (KVA)	Power network	53	83	120
	Generator	70	110	158
Input protection (A)	Fuse	60	90	130
	Circuit breaker	100	120	160
Min. cable size (mm²)	Power cord	10	16	25
	Output cable	95×1	70×2	95×2
	Protective GND wire	10	16	25

- Please refer to Table 4-6-1 to check if standard of input voltage, breaker and input cable is suitable

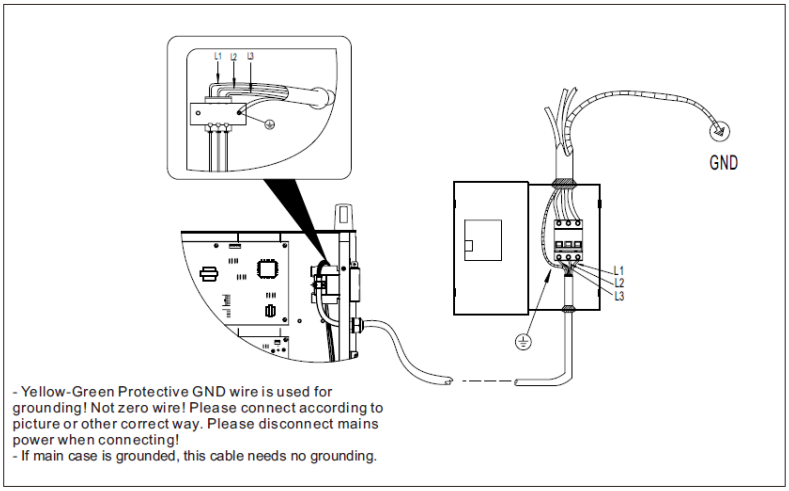

Fig. 4-6-2: Connections of power cord and distribution box

4-7 welding process installation

Warning! Operating the equipment incorrectly can cause serious injury and damage. This part is about operating. Do not use the functions until you have read and completely understood content of this manual.

●SAW welding process installation:

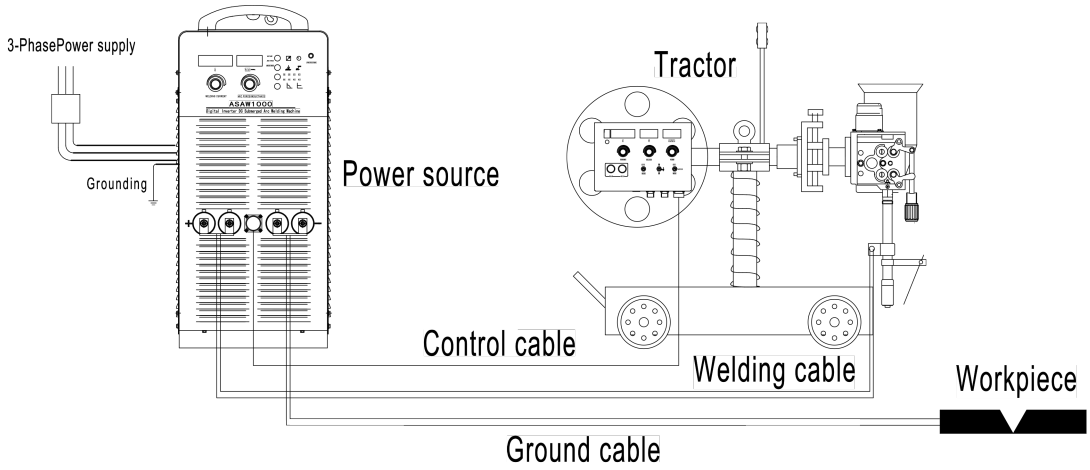

Fig. 4-7-1: Installation for SAW

● STICK welding process installation:

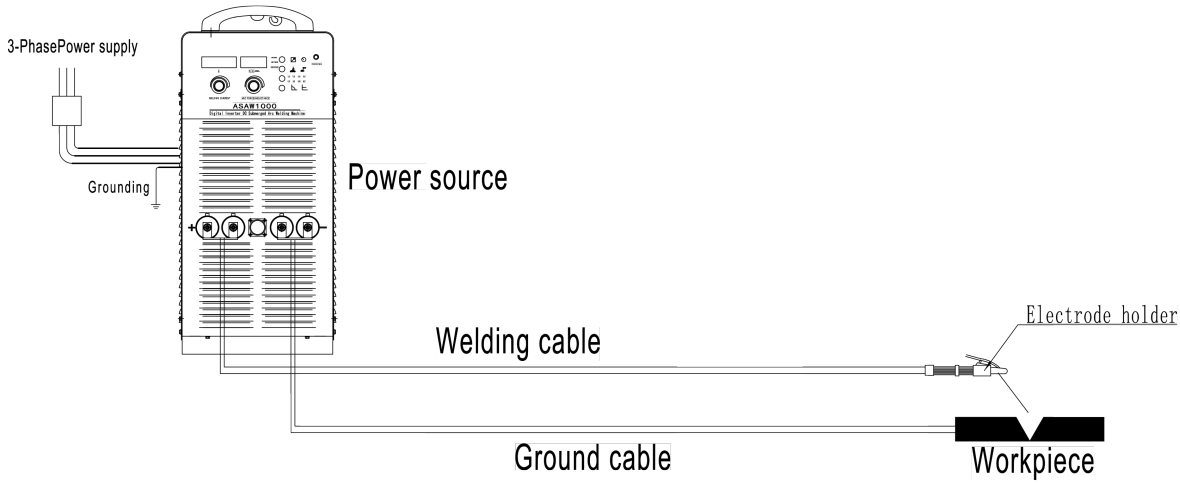

Fig. 4-7-2: Installation for STICK

● **GOUGING process installation:**

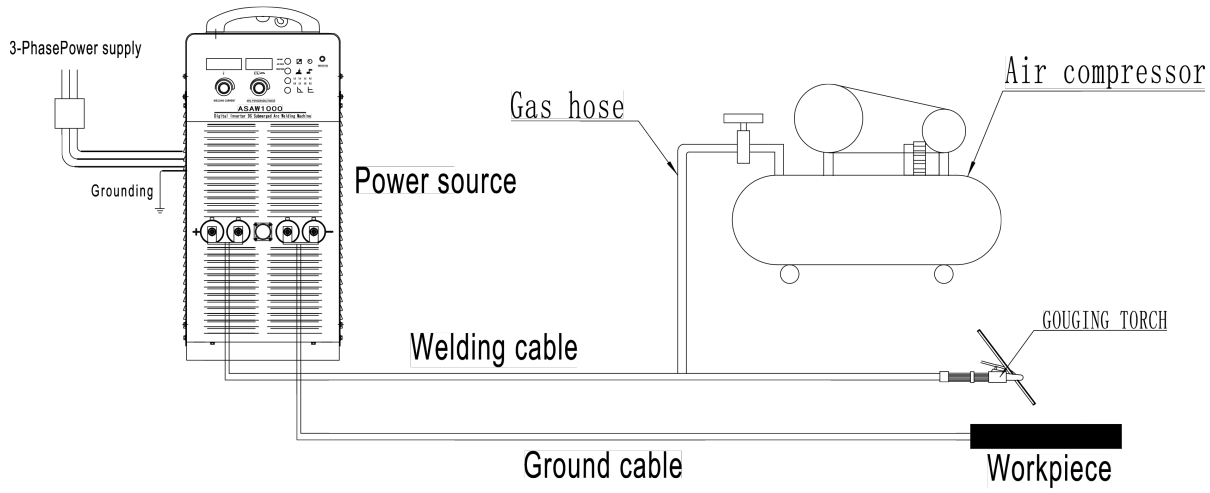

Fig. 4-7-3: Installation for GOUGING

4-8 Technical data

Model		1000	1250
Primary power voltage /Frequency	3 phase, AC380V/400V/415V/440V±10%, 50Hz		
Rated input power (KVA)		55	69
Rated input current (A)		83/78.9/76/71.7	115/109.3/105.3/99.3
Welding current range (A)		50~1000	50~1250
Welding voltage range (V)		20~50	20~50
Rated duty cycle (%)	100		
Open circuit voltage (V)		SAW: 84 SMAW:9	SAW: 95 SMAW:9
Efficiency (%)	≥89		

Power factor	≥0.95		
Wire diameter (mm2)		Φ2.0~Φ5.0	Φ2.0~Φ6.0
Dimensions (mm3)		785×360×805	785×360×848
Weight (Kg)		95	100
Insulation class	H		

Table 4-8-1:POWER SAW1000/1250 technical data

4-9 Dimension

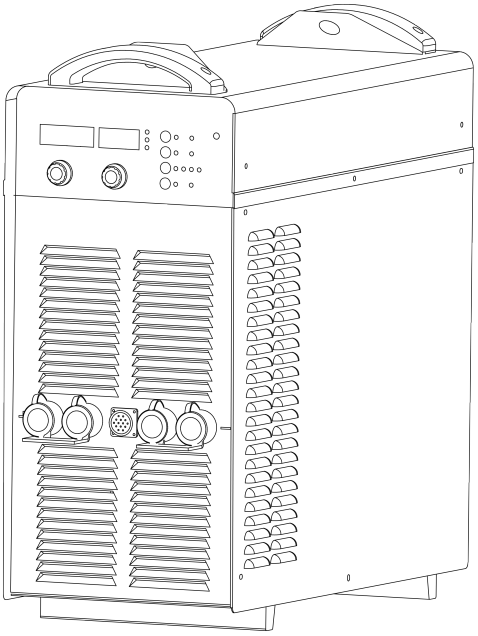

Fig. 4-9-1: Dimension

NO.	Item	SAW1000	SAW1250
1	length	785	785
2	Width	360	360
3	Height	805	848

Table. 4-9-1: Dimension

4-10 Disassembly and reassembly

POWER SAW1000

Fig. 4-10-2: Disassemble and reassembly

No	Item	Stock No.
1	Potentiometer knob	720031-00071 380V/50Hz, 415V/50Hz, CE model
2	Knob cover	766003-00355 380V/50Hz, 415V/50Hz, CE model
3	Front plate	262005-00076 380V/50Hz, 415V/50Hz, CE model
4	Digital display board	220383-00005 380V/50Hz, 415V/50Hz, CE model
5	Output connection plate	766003-00309 380V/50Hz, 415V/50Hz, CE model
6	Negative connection plate	766003-00105 380V/50Hz, 415V/50Hz, CE model
7	Control socket	740001-00043 380V/50Hz, 415V/50Hz, CE model
8	Assembly type cable socket (black)	740004-00052 380V/50Hz, 415V/50Hz, CE model
9	Assembly type cable socket (red)	740004-00053 380V/50Hz, 415V/50Hz, CE model
10	Left plate	262017-00052 380V/50Hz, 415V/50Hz, CE model
11	Handle	766003-00138 380V/50Hz, 415V/50Hz, CE model
12	Lifting lug	766003-00427 380V/50Hz, 415V/50Hz, CE model
13	Top plate	262029-00027 380V/50Hz, 415V/50Hz, CE model
14	Fan	746001-00010 380V/50Hz，415V/50Hz
		746001-00087 CE model
15	Circuit breaker	745011-00001 380V/50Hz, 415V/50Hz, CE model
16	Rear plate	262011-00694 380V/50Hz
		262011-00038 415V/50Hz
		262011-00798 CE model
17	Plastic cable clamp	773002-00020 380V/50Hz, 415V/50Hz, CE model
18	Junction box	740016-00009 380V/50Hz, 415V/50Hz, CE model
19	Circuit breaker cover	766003-00201 380V/50Hz, 415V/50Hz, CE model
20	Plastic fan cover	766003-01521 CE model
21	Right plate	262023-00053 380V/50Hz, 415V/50Hz, CE model
22	Bottom plate	263065-00032 380V/50Hz, 415V/50Hz, CE model

23	Rack capacitor board	220293-00016 380V/50Hz, 415V/50Hz, CE model
24	Main transformer	220629-00009 380V/50Hz, 415V/50Hz, CE model
25	Current sensor	753001-00077 380V/50Hz, 415V/50Hz, CE model
26	Cu-Al joint	740016-00017 380V/50Hz, 415V/50Hz, CE model
27	Output reactor	763004-00010 380V/50Hz, 415V/50Hz, CE model
28	Second plate	263071-00134 380V/50Hz, 415V/50Hz, CE model
29	Polypropylene capacitor	722001-00074 380V/50Hz, 415V/50Hz, CE model
30	Resonance inductor	220521-00002 380V/50Hz, 415V/50Hz, CE model
31	Capacitor filter inductor	220155-00001 380V/50Hz, 415V/50Hz, CE model
32	Polypropylene capacitor	722001-00062 380V/50Hz, 415V/50Hz, CE model
33	Wire-wound resistance	720005-00032 380V/50Hz, 415V/50Hz, CE model
34	IGBT radiator (left)	264005-00038 380V/50Hz, 415V/50Hz, CE model
35	Diode protection board	220455-00002 380V/50Hz, 415V/50Hz, CE model
36	Fast recovery diode module	735006-00018 380V/50Hz, 415V/50Hz, CE model
37	Current exchange inductor	220281-00008 380V/50Hz, 415V/50Hz, CE model
38	Output diode radiator	264011-00018 380V/50Hz, 415V/50Hz, CE model
39	Polypropylene capacitor	722001-00067 380V/50Hz, 415V/50Hz, CE model
40	IGBT protection board	220005-00135 380V/50Hz, 415V/50Hz, CE model
41	IGBT module	735007-00038 380V/50Hz, 415V/50Hz, CE model
42	Varistor	720021-00017 380V/50Hz
		720021-00017 CE model
		720021-00021 415V/50Hz
43	Three phase rectifier module	735005-00003 380V/50Hz, 415V/50Hz, CE model

Table4-10-2: Main components list of SAW1000

POWER SAW1250

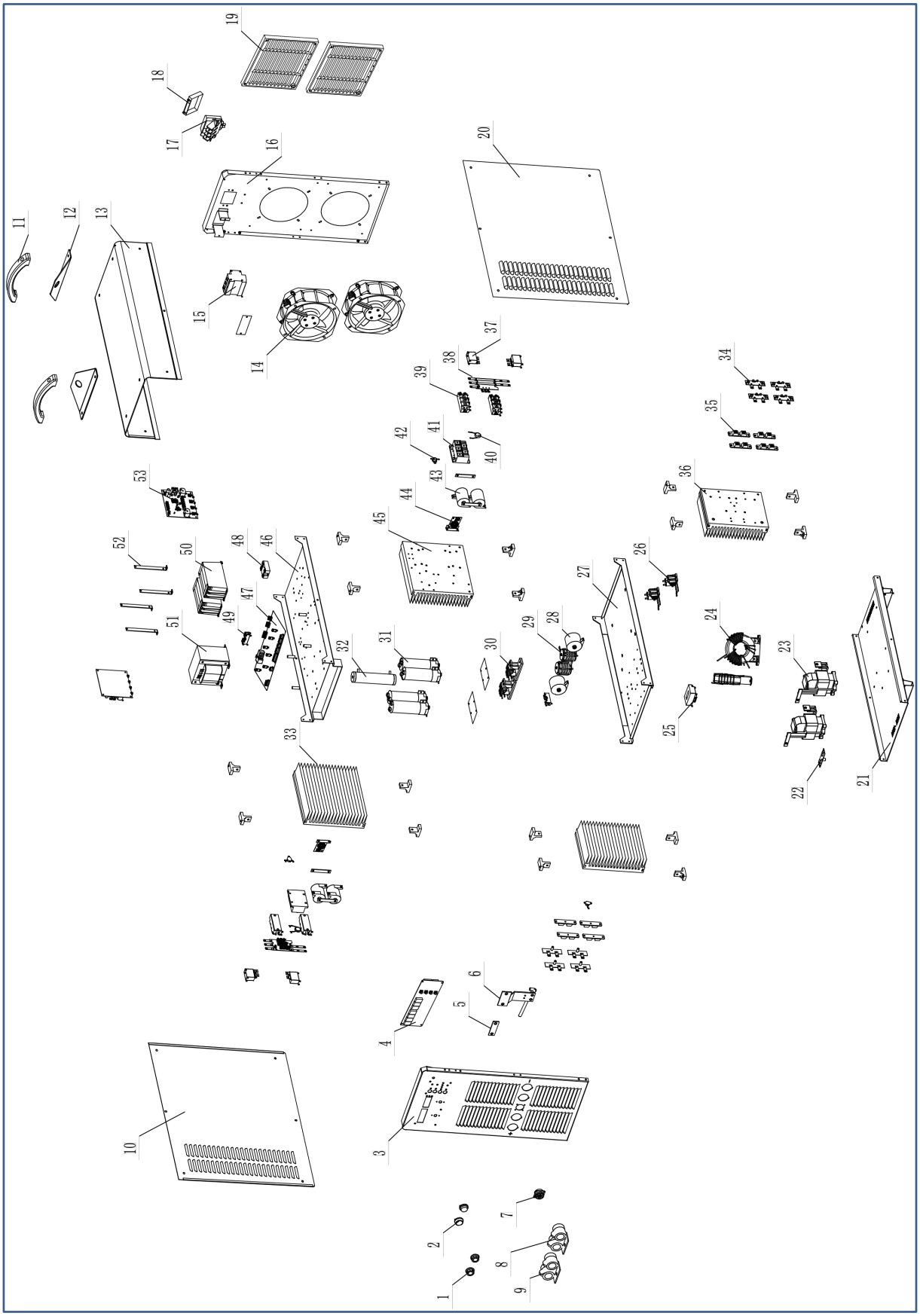

Fig. 4-10-2: Disassemble and reassembly

No	Item	Stock No.
1	Potentiometer knob	720031-00071 380V/50Hz, 415V/50Hz, CE model
2	Knob cover	766003-00355 380V/50Hz, 415V/50Hz, CE model
3	Front plate	262005-00083 380V/50Hz, 415V/50Hz, CE model
4	Digital display board	220383-00005 380V/50Hz, 415V/50Hz, CE model
5	Output connection plate	766003-00309 380V/50Hz, 415V/50Hz, CE model
6	Negative connection plate	766003-00105 380V/50Hz, 415V/50Hz, CE model
7	Control socket	740001-00043 380V/50Hz, 415V/50Hz, CE model
8	Assembly type cable socket (black)	740004-00052 380V/50Hz, 415V/50Hz, CE model
9	Assembly type cable socket (red)	740004-00053 380V/50Hz, 415V/50Hz, CE model
10	Left plate	262017-00078 380V/50Hz, 415V/50Hz, CE model
11	Handle	766003-00138 380V/50Hz, 415V/50Hz, CE model
12	Lifting lug	766003-00427 380V/50Hz, 415V/50Hz, CE model
13	Top plate	262029-00027 380V/50Hz, 415V/50Hz, CE model
14	Fan	746001-00093 380V/50Hz，415V/50Hz
		746001-00035 CE model
15	Circuit breaker	745011-00012 380V/50Hz, 415V/50Hz, CE model
16	Rear plate	262011-00044 380V/50Hz
		262011-00044 415V/50Hz
		262011-00843 CE model
17	Junction box	740016-00009 380V/50Hz, 415V/50Hz, CE model
18	Circuit breaker cover	766003-00201 380V/50Hz, 415V/50Hz, CE model
19	Plastic fan cover	766003-01521 380V/50Hz, 415V/50Hz, CE model

20	Right plate	262023-00078 380V/50Hz, 415V/50Hz, CE model
21	Bottom plate	263065-00035 380V/50Hz, 415V/50Hz, CE model
22	Rack capacitor board	220293-00016 380V/50Hz, 415V/50Hz, CE model
23	Output reactor	763004-00115 380V/50Hz, 415V/50Hz, CE model
24	Main transformer	220629-00011 380V/50Hz, 415V/50Hz, CE model
25	Current sensor	753001-00009 380V/50Hz, 415V/50Hz, CE model
26	Current exchange inductor	220281-00012 380V/50Hz, 415V/50Hz, CE model
27	Second plate	263071-00136 380V/50Hz, 415V/50Hz, CE model
28	Polypropylene capacitor	722001-00075 380V/50Hz, 415V/50Hz, CE model
29	Resonance inductor assembly	220521-00003 380V/50Hz, 415V/50Hz, CE model
30	Capacitor filter inductor	220155-00007 380V/50Hz, 415V/50Hz, CE model
31	Polypropylene capacitor	722001-00062 380V/50Hz, 415V/50Hz, CE model
32	Wire-wound resistance	720005-00032 380V/50Hz, 415V/50Hz, CE model
33	IGBT radiator(left)	264005-00038 380V/50Hz, 415V/50Hz, CE model
34	Diode protection board	220455-00002 380V/50Hz, 415V/50Hz, CE model
35	Fast recovery diode module	735006-00029 380V/50Hz, 415V/50Hz, CE model
36	Output diode radiator	264011-00020 380V/50Hz, 415V/50Hz, CE model
37	Polypropylene capacitor	722001-00014 380V/50Hz, 415V/50Hz, CE model
38	IGBT protection board	220005-00008 380V/50Hz, 415V/50Hz, CE model
39	IGBT module	735007-00073 380V/50Hz, 415V/50Hz, CE model
40	Varistor	720021-00017 380V/50Hz
		720021-00021 415V/50Hz
		720021-00017 CE model
41	Three phase rectifier module	735005-00003 380V/50Hz, 415V/50Hz, CE model
42	Temperature relay	745008-00008 380V/50Hz, 415V/50Hz, CE model

43	Polypropylene capacitor	722001-00070 380V/50Hz, 415V/50Hz, CE model

Table 4-10-3: Main components list of SAW1250

5-TROUBLE SHOOTING

Warning! An electric shock can be fatal. Before doing any work on the machine:

-Switch it off and unplug it from the mains

-Put up a clearly legible and easy-to-understand warning sign to stop anybody inadvertentlyswitching it on again

-Check to make sure the electrically charged components (e.g.capacitors) have been discharged.

-Bolts in machine case also work for ground connection. Never use other bolt that can not work for ground connection.

Note! The flowing troubles and causes are uncertain. However, during the process of SAW and the normal using conditions, that might happen.

Error code

This series welding machine will be on protected mode if machine has any problem, and display error code.

No.	Error code	Fault
1	E19 (E001)	Over-heat protection
2	E18	Voltage feedback wire is broken
3	E1A (E002)	Circulating current fault (short circuit of output diode)
4	E43 (E003)	Communication fault
5	E35(E004)	Short circuit of wire feeder
6	--- (E005)	Wire feeder is out of control
7	--- (E006)	Short circuit of travelling motor
8	--- (E007)	Travelling motor is out of control
9	E70 (E008)	Short circuit when switch SAW to SMAW

Table 5-1: Error code

Note! E001-E008 is old version error code, which are only valid for earlier version machines. New version machines do not have 6, 7, 8 error code.

Weld seam fault, cause and troubleshooting on SAW welding

Fault	Description	Cause	Remedy
Weld seam is uneven	Weld seam width is uneven	(1)Uneven welding speed (2)Instable wire feeding (3)Unsettled contact tip points	(1) Check the circuit (2) Adjust wire feeding roller (3)Replace contact tip
Undercut	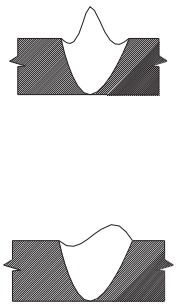	(1)Welding speed is too fast (2)Welding current is too large (3)Arc voltage is too large (4)Misalignment wire end	(1) Reduce the welding speed, or adopt double-arc or multi-arc welding (2) Reduce the welding current (3)Reduce the welding voltage (4)Adjust the welding wire's position
Convex	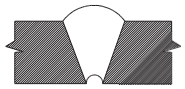	Excessive flux backing pressure	Improve the flux backing
Metal spillage		(1)Too long of wire extension (2)Groove is too small (3)Arc voltage is too small (4)Misalignment wire end	(1)Reduce the length (2)Change the groove (3)Increase Arc voltage (4)Adjust wire position
Burn-through and thick back weld	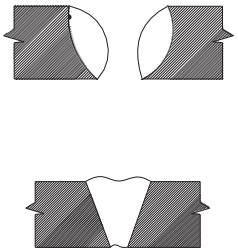	(1) Welding current is too large (2) Welding speed is too slow (3) Large groove gap (4) Flux backing is loose	(1)Reduce welding current (2)Increase welding speed (3) Improve assemble quality (4) Improve the fixture
Poor fusion		(1)Too small of welding current (2)Welding speed is too fast (3)Arc voltage is too high (4)Misalignment wire end	(1)Increase the current properly (2)Slow down the welding speed (3)Reduce the Arc voltage (4) Straighten wire and adjust welding

	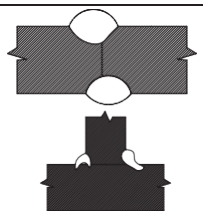	(5)Fluctuation of power network voltage is too large	head position (5) Avoid peak period of power utility
Pore	(1) Cylindrical ditch (2) Distribute around seam center (3) Sporadic or swarm	(1) Base metal is tarnished or not clear (2) Wire does not completely derusting or remove oil (3) Flux is humid (4) Bad flux composition or performance	(1) Clean (2) Drying flux (3) Choose appropriate flux
Heat crack	(1) Exist along the seam vertical or horizontal grain boundaries (2) Forming a single double-sided welding at the beginning or the end	(1) Low melting point sulfide excessive segregation (2) Before-or terminal at Weld crystallization without adequate binding	(1) Choose low carbon, low sulfur, high manganese wire and low silicon high manganese flux (2) Add width of arc starting plate, arc stopping plate and weld fastness appropriately, adopt slotting arc starting plate
Slag	——	(1) Slag is not clean when on multi-layer-welding (2) Misalignment wire end on later weld seam welding	(1) Clean the slag (2) Adjust the wire position

Table 5-2: Welding seam fault, cause and remedy

Machine problem, cause and remedy

No.	Problem	Cause	No.	Problem	Cause
1	Single-side work	1)Circuit breaker fault 2)3-phase rectifier module is damaged 3)Resistance value of current transformer board becomes larger 4)Resonance capacitor is damaged	3	No current output	1)Default phase; circuit breaker is damaged 2)Error code displays E002 3)Error code displays E001 4)Open circuit voltage in SMAW is abnormal 5)Voltage feedback wire within

		5)Current exchange inductor is damaged 6)Drive board works abnormally 7)IGBT module is damaged			the machine is broken 6)Current exchange inductor is damaged 7)Fast recovery diode module is damaged 8)Three phase rectifier module is damaged; varistor explodes 9)IGBT protection board is damaged 10) IGBT module is damaged 11) Main control board or drive board of welding machine is damaged 12) Current transformer board is damaged
2	Broken arc	1) Parameters are not proper 2) Mechanical failure of wire feed channel 3) Connecting cable is poorly contacted, broken or aged 4) Tractor display board is damaged 5) Welding machine main control board is damaged 6) Welding machine fault			
4	Open circuit voltage is abnormal on SMAW mode	1)Power transformer is damaged 2)The position of SMAW / SAW switch is wrong 3)Short circuit between welding machine positive and negative output terminals 4)Main control board is damaged	5	No wire feeding during welding	1)Contact tip is burnt out 2)Tractor digital display board is damaged 3)Welding machine main control board is damaged 4)Connecting cable is broken or poorly contacted
6	Unstable tractor speed	1)Tractor travelling motor is damaged 2)Tractor speed rotary encoder is damaged 3)The screw of tractor drive roller is loose 4)Clutch is damaged 5)Control cable is broken or	7	Welding current can not adjust to the max. value	1)Welding current rotary encoder of the tractor control box is damaged 2)Tractor digital display board is damaged 3)Welding current rotary encoder of welding machine is damaged 4)Wire disconnection of current

		poorly contacted 6)Tractor digital display board is damaged 7)Welding machine main control board is damaged			sensor 5) Bad contact of voltage feedback wire 6) Welding machine main control board is damaged
8	Tractor does not move during movement test	1) Control cable or aviation socket fault 2) Wire disconnection within the welding machine 3) Mechanical failure of tractor travelling part 4) Tractor digital display board is damaged 5) Welding machine main control board is damaged	9	SMAW is normal; cannot start arc in SAW mode	1) IGBT module is damaged 2) Three phase rectifier module is damaged 3) Tractor digital display board is damaged 4) Welding machine main control board, drive board is damaged 5) Circuit breaker is damaged
10	Wire feeding is unstable when welding	1) Mechanical failure of wire feed channel 2) The position of droop / flat characteristic switch is wrong 3) Tractor digital display board is damaged 4) Welding machine main control board is damaged	11	Tractor pass the movement test, but cannot travel during welding	1)Control cable or aviation socket fault 2)Wire disconnection within the welding machine 3)Tractor digital display board is damaged 4)The position of SMAW / SAW switch is wrong 5)Welding machine main control board is damaged
12	Wire withdraw is normal; there is no downward wire feeding until keep pressing the downward wire feeding button for 3-5 seconds	1) Short circuit between positive and negative terminals 2) Short circuit of fast recovery diode module 3) Mechanical failure of wire feed channel 4) 14 pin cable (7) is broken	13	Current is unstable	1) Improper parameters 2) The position of droop / flat characteristic switch is wrong 3) Bad connection of voltage feedback wire 4) Mechanical failure of wire feed channel

		5) Tractor digital display board is damaged 6) Welding machine main control board is damaged			5) Welding current potentiometer is damaged 6) Control cable is broken; connectors are loose 7) Bad contact of current sensor connections 8) Tractor digital display board is damaged 9) Welding machine main control board is damaged 10) Reactor connection is loose 11) Current transformer board or current sensor is damaged
14	Start /Stop Button does not work	1) Start/ Stop button is damaged 2) Wire disconnection between Start / Stop button and the wires of tractor digital display board 3) Tractor digital display board is damaged 4) Welding machine main control board is damaged			
15	No wire feeding during stand-by mode	1) Short circuit between positive and negative welding cables 2) Mechanical failure of wire feed channel 3) Connecting cable is poorly contacted, broken or aged 4) Tractor digital display board is damaged 5) Welding machine main control board is damaged 6) Fast recovery diode module is damaged	16	Tractor travelling speed is not adjustable	1) Mechanical failure of tractor travelling part 2) Tractor speed rotary encoder is damaged 3) Tractor digital display board is damaged 4) Welding machine main control board is damaged
			17	Work in SAW mode, not in SMAW mode	1)Wire disconnection of main control board (1×10) 2)Welding machine main control board is damaged
18	Current is small and cannot adjust larger	1) Single-side work 2) Cable fault 3) Default phase 4) Rotary encoder is damaged 5) Filter capacitor is damaged 6) Resonance capacitor is	19	Welding voltage is unstable	1) Improper parameters 2) Voltage rotary encoder is damaged 3) Welding cable is too long or poorly contacted 4) Mechanical failure of wire feed channel

		damaged 7) Fast recovery diode module is damaged 8) Current transformer board is damaged 9) The diameter of welding wire is not proper 10) Wire feed motor is damaged 11) Welding machine main control board is damaged			5) Control cable is loose or poorly contacted 6) Default phase 7) Loose connection between reactor and the terminal 8) The position of droop / flat characteristic switch is wrong 9) Bad contact of voltage feedback wire 10) Tractor digital display board is damaged 11) Welding machine main control board is damaged
20	Difficult to start arc	1) Improper parameters 2) The diameter of welding wire is not proper 3) Default phase 4) Welding wire adhesives to the flux seriously 5) Bad contact of welding cable 6) Voltage feedback wire is broken 7) Resonance capacitor is damaged 8) Single-side work 9) Welding machine main control board is damaged			

Table 5-3: Machine problem, cause and remedy

6-CARE AND MAINTENANCE

- **Before open the machine**

Warning! An electric shock can be fatal. Before doing any work on the machine:

-Switch it off and unplug it from the mains

-Put up a clearly legible and easy-to-understand warning sign to stop anybody inadvertentlyswitching it on again

-Check to make sure the electrically charged components (e.g.capacitors) have been discharged.

-Bolts in machine case also work for ground connection. Never use other bolt that cannot work for ground connection.

- **Maintenance**

Please follow the instructions as below to ensure normal lifespan of power source.

-Conduct safety check at regular intervals (see “Safety rules”)

-Dismantle machine side panels and clean machine inside with clean and low-pressure compressed air by professionaltechnician, not less than twice per year. Clean the components at a certain distance only;

-If a lot of dust has accumulated, clean the cooling-airducts.

- **Daily maintenance**

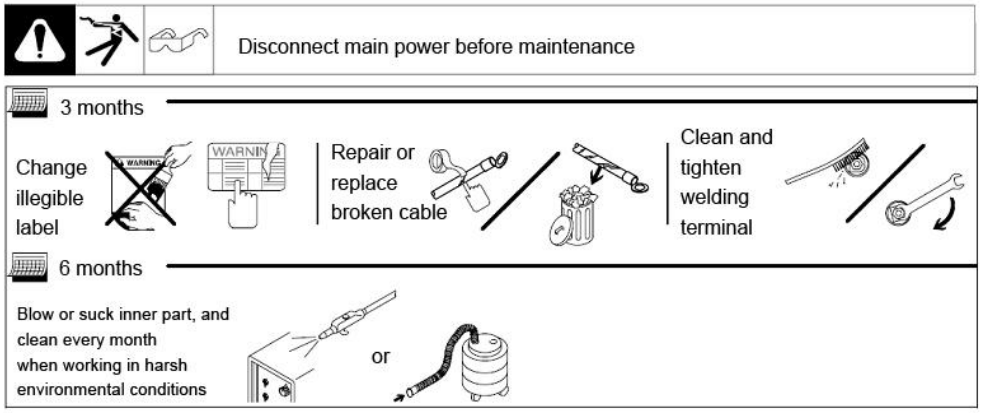

Fig. 6-1: Daily maintenance

7-BASIC WELDING TECHNIQUE

Note! This section being general welding technique guide is for reference only. Specific functions of your machine please refer to previous chapters.

7-1 SAW basic welding technique

Introduction

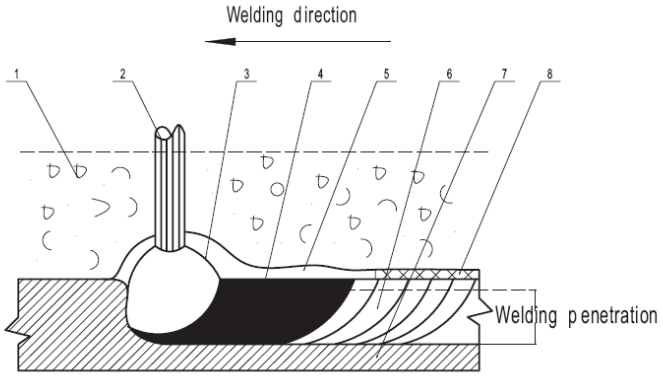

Fig. 7-1-1: SAW welding

SAW (Submerged Arc Welding) welding is a welding method that arc burns under flux. During welding, granular flux heaps and covers on work piece welding zone evenly through flux hopper hose. Wire is fed by wire feeder and contact tip to welding zone from wire spool, and arc burns between wire (under flux) and work piece.

Flux

It is used to isolate welding metal from air, and it protect metal from getting contaminative. Also flux performs metallurgical treatment for molten metal. After work piece material is selected, welding seam chemical component is determined by flux and wire.

Flux is divided to ceramics flux (sintered flux) and fused flux. Popular is flux 431 (fused acid flux), 101 (sintered basic flux), they are suit for low carbon and low steel welding.

Use requirement: dry flux at 250℃, and keep warm for 1~2h before using flux, otherwise, pore may occur. Flux used for DC welding must dry at 300~400℃, and keep warm for 2h+.

Wire

Choose wire with similar ingredient with work piece. Welding current is different for wire with different diameter.

Wire diameter (mm)	2	3	4	5	6
Current density (A/mm^2)	63~125	50~85	40~63	35~50	28~42

Welding current (A)	200~400	350~600	500~800	700~1000	820~1200

Table 7-1-1: Welding current range for wire of different diameter

Prepare before welding

1. Groove design and processing: compare with other welding process, SAW base metal has large dilution rate, base metal material has large influence to welding seam performance, so SAW grove must take this into consideration. Single wire SAW: when plate thickness is less than 14mm, grove is not necessary, leave a distance when assemble; when plate thickness is 14~22mm, use V type grove; when plate thickness is 22~50mm, use X type grove. For pressure vessel such as boiler, use U type or double U type grove, to ensure complete penetration of bottom layer and eliminate slag inclusion.

Please refer to “GB／T986~1988” standard for submerged arc welding grove basic type and size. Normally choose edge planer and gas cutting machine to make grove according to requirement of working accuracy.

2. Assemble and spot fixation: submerged arc welding needs the joint gap is even and without misalignment, need to conduct fixed interval welding and positioned welding according to different thickness of plate, as showed in Table 9-1-2. Add arc starting board and arc blowout board on both ends of straight welding seam, so as to decrease defect.

Plate thickness t/mm	Welding seam length /mm	Positioning length /mm
<25	300 ~ 500	50 ~ 70
<25	200 ~ 500	70 ~ 100

Table 7-1-2: Submerged arc welding assemble standard

3. Pre-weld cleaning: scale and iron power inside of grove, and damp & oxidizing because of long time standing time may cause pore during welding. Need to increase work piece temperature or conduct treatment like sand blast before welding.

Welding seam treatment

1. Plate butt welding seam

This welding seam usually chooses double side welding. Need to ensure proper penetration of first side and avoid molten metal overspill and burn-through. So must adopt necessary processing measure to ensure welding process stability. Usual measures are Overhang double sides submerged arc welding, Flux backing welding and Temporary base plate welding.

a. Dangling welding: it does not need any auxiliary equipment and device.

Wire diameter (mm)	Steel plate thickness (mm)	Weld seam sequence	Welding current (A)	Welding voltage (V)	Welding speed (m/h)
Φ4	6	Front Reverse	380~420 430~470	30 30	34.6 32.7
Φ4	8	Front Reverse	440~480 480~530	30 31	30 30
Φ4	10	Front	530~570	31	27.7

		Reverse	590~640	33	27.7
Φ4	12	Front Reverse	620~660 680~720	35 35	25 24.8
Φ4	14	Front Reverse	680~720 730~770	37 40	24.6 22.5
Φ4	15	Front Reverse	800~850 850~900	34~36 36~38	38 26
Φ4	17	Front Reverse	850~900 900~950	35~37 37~39	36 26
Φ4	18	Front Reverse	850~900 900~950	36~38 38~40	36 24
Φ4	20	Front Reverse	850~900 900~1000	36~38 38~40	35 24
Φ4	22	Front Reverse	900~950 1000~1050	37~39 38~40	32 24

Table 7-1-3: Overhang double sides submerged arc welding

Steel plate thickness (mm)	Assembly gap (mm)	Wire diameter (mm)	Welding current (A)	Arc voltage (V)	Welding speed (m/h)
3	2	Φ3	380~420	27~29	47
4	2~3	Φ4	450~500	29~31	40.5
5	2~3	Φ4	520~580	31~33	37.5
6	3	Φ4	550~600	33~35	37.5
7	3	Φ4	640~680	35~37	34.5
8	3~4	Φ4	680~720	35~37	32
9	3~4	Φ4	720~780	36~38	27.5
10	4	Φ4	780~820	38~40	27.5
12	5	Φ4	850~900	39~41	23
14	5	Φ4	880~920	39~41	21.5

Table 7-1-4: Gantry type- cooper wall one side welding both sides formation submerged arc welding

b. Flux backing welding: schematic diagram as below figure. This measure needs the bottom flux long time fix with work piece in the range of whole welding seam, and with even pressure because too loose will cause slag leakage and liquid metal dropping, even cause burn-through. Conduct welding seam bottom cleaning for importance product before second side welding, at this time, welding standard can decrease.

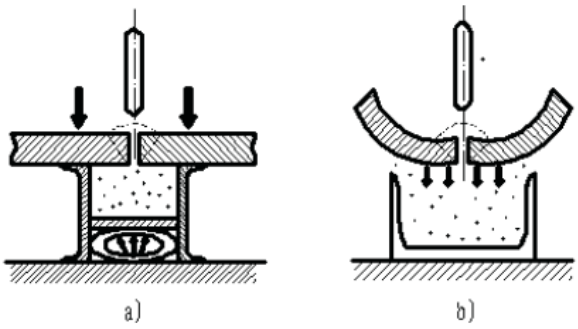

Fig.7-1-2: Schematic diagram of flux backing welding

c. Temporary base plate welding

When conduct first side welding of double side welding by this welding measure, need to leave a gap with certain width in the joint, to ensure fine grain flux enter and fill in. Function of temporary base plate is holding up flux which fills in the gap. For straight welding seam welding, plate normal choose thin strip steel with 3~4mm thickness and 30~50mm width, also can choose asbestos cord and asbestos board as support, as below figure.

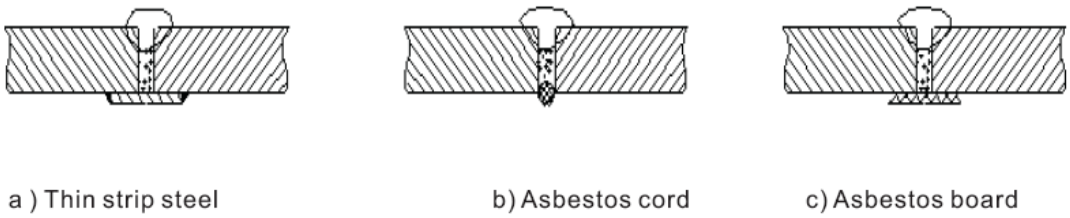

Fig. 7-1-3: Schematic diagram of temporary base plate

Work piece thickness (mm)	Assembly gap (mm)	Wire diameter (mm)	Welding current (A)	Arc voltage (V)	Welding speed (m/h)	Flux backing pressure MPa
2	0~1.0	φ1.6	120	24~28	43.5	0.08
3	0~1.5	φ3	400~425	25~28	70	0.08
4	0~1.5	φ4	525~550	28~30	50	0.10~0.15
5	0~2.5	φ4	575~625	28~30	46	0.10~0.15

6	0~3.0	φ4	600~650	28~32	40.5	0.10~0.15
7	0~3.0	φ4	650~700	30~34	37	0.10~0.15
8	0~3.5	φ4	725~775	30~36	34	0.10~0.15

Table 7-1-5: Flux backing one side welding both sides formation submerged arc welding

Work piece thickness (mm)	Groove description	Wire diameter (mm)	Weld seam sequence	Groove size		Arc voltage (V)	Welding current (A)	Welding speed (m/h)
				α (°)	ı/κ (mm)			
14	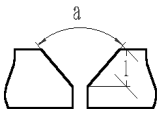	φ5	Front Reverse	80 —	6 —	36~38 36~38	830~850 600~620	25 45
16		φ5	Front Reverse	70 —	7 —	36~38 36~38	830~850 600~620	20 45
18		φ5	Front Reverse	60 —	8 —	36~38 36~38	830~860 600~620	20 45
22		φ6 φ5	Front Reverse	55 —	13 —	38~40 36~38	1050~1150 600~620	18 45
24	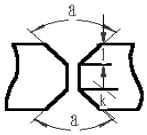	φ6 φ5	Front Reverse	40 40	14 14	38~40 36~38	1000~1200 600~800	24 28
30		φ6	Front Reverse	80 60	10 10	36~40 36~38	1000~1100 900~1000	18 20

Table 7-1-6: Flux backing with groove double sides submerged arc welding

Steel plate thickness (mm)	Assembly gap (mm)	Wire diameter (mm)	Welding current (A)	Arc voltage (V)	Welding speed (m/h)
14	3~4	Φ5	700~750	34~36	30
16	3~4	Φ5	700~750	34~36	27
18	4~5	Φ5	750~800	36~40	27
20	4~5	Φ5	850~900	36~40	27
24	4~5	Φ5	900~950	38~42	25

28	5~6	Φ5	900~950	38~42	20
30	6~7	Φ5	950~1000	40~44	16

Table 7-1-7: Flux backing with pre reserved gap double sides submerged arc welding

2. Fillet welding

This welding measure mainly use in T-shaped joint and overlap joint. Fillet welding has fillet welding in flat position and bevel welding two types.

Fillet welding in flat position: wire is in vertical position, molten pool is in horizontal position, so it is easy to ensure welding seam quality. When the gap of welding seam is over than 1.5mm, burn through and welding pool metal overspill may occur, so must pay attention to assemble quality for fillet welding in flat position. Arc voltage should not be too high, to avoid undercut.

Weld leg (mm)	Wire diameter (mm)	Welding current (A)	Arc voltage (V)	Welding speed (m/h)
6	Φ5	450~475	34~36	40
8	Φ5	550~600	34~36	30
8	Φ5	575~625	34~36	30
10	Φ5	600~650	34~36	23
10	Φ5	650~700	34~36	23
12	Φ5	600~650	34~36	15
12	Φ5	725~775	36~38	20
12	Φ5	775~825	36~38	18

Table 7-1-8: Fillet welding in the flat position welding standard

7-2 SMAW (Stick) welding technique

One of the most common types of arc welding is manual metal arc welding (MMA) or stick welding. An electric current is used to strike an arc between the base material and a consumable electrode rod or ‘stick’. The electrode rod is made of a material that is compatible with the base material being welded and is covered with a flux that gives off gaseous vapours that serve as a shielding gas and providing a layer of slag, both of which protect the weld area from atmospheric contamination. The electrode core itself acts as filler material the residue from the flux that forms a slag covering over the weld metal must be chipped away after welding.

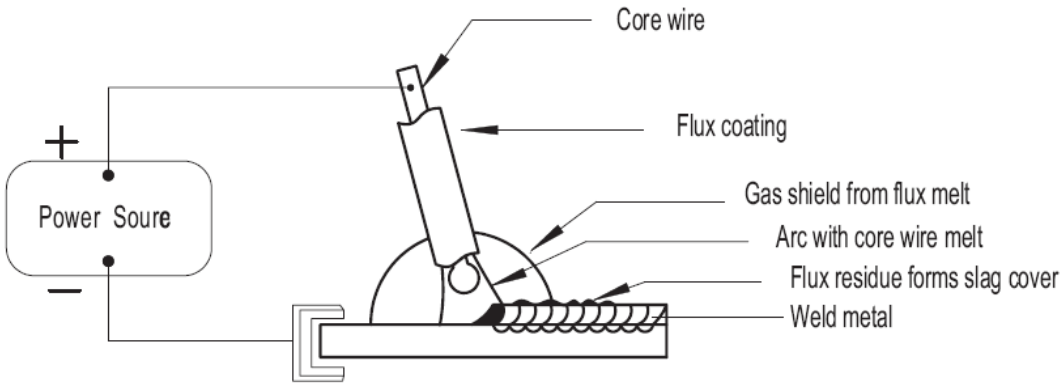

Fig. 7-2-1: Stick ARC

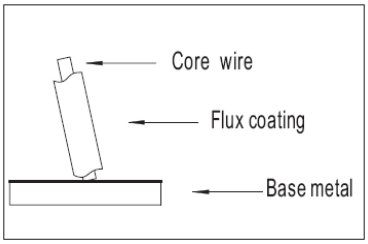

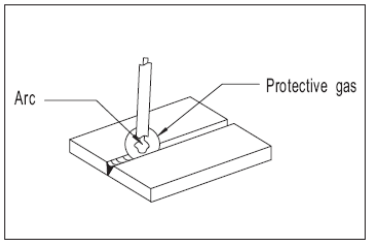

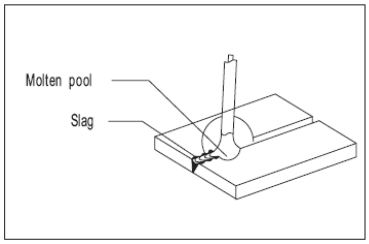

Fig. 7-2-2: ARC Ignition Fig. 7-2-3: Weld pool Protection Fig.7-2-4: Slag

• The arc is initiated by momentarily touching the electrode to the base metal.

• The heat of the arc melts the surface of the base metal to form a molten pool at the end of the electrode.

• The melted electrode metal is transferred across the arc into the molten pool and becomes the deposited weld metal.

• The deposit is covered and protected by a slag which comes from the electrode coating.

• The arc and the immediate area are enveloped by an atmosphere of protective gas.

Manual metal arc (stick) electrodes have a solid metal wire core and a flux coating. These electrodes are identified by the wire diameter and by a series of letters and numbers. The letters and numbers identify the metal alloy and the intended use of the electrode.

The Metal Wire Core works as conductor of the current that maintains the arc.

The core wire melts and is deposited into the welding pool.

The covering on a shielded metal arc welding electrode is called Flux.

The flux on the electrode performs many different functions.

These include:

● producing a protective gas around the weld area

● providing fluxing elements and deoxidizers

● creating a protective slag coating over the weld as it cools

- establishing arc characteristics
- adding alloying elements

Covered electrodes serve many purposes in addition to adding filler metal to the molten pool. These additional functions are provided mainly by the covering on the electrode.

MMA (Stick) Welding Fundamentals

Electrode Selection

As a general rule, the selection of an electrode is straight forward, in that it is only a matter of selecting an electrode of similar composition to the parent metal. However, for some metals there is a choice of several electrodes, each of which has particular properties to suit specific classes of work. It is recommend to consult your welding supplier for the correct selection of electrode.

Table 7-2-1: Electrode Size

Average Thickness of Material	Maximum Recommended Electrode Diameter
1.0 - 2.0mm	2.5mm
2.0 - 5.0mm	3.2mm
5.0 - 8.0mm	4.0mm
8.0 - > mm	5.0mm

The size of the electrode generally depends on the thickness of the section being welded, and the thicker the section the larger the electrode required. The table gives the maximum size of electrodes that maybe used for various thicknesses of section base on using a general purpose type 6013 electrode.

Table 7-2-2: Welding Current (Amperage)

Electrode Size ø mm	Current Range (Amps)
2.5mm	60 - 95
3.2mm	100 - 130
4.0mm	130 - 165
5.0mm	165 - 260

Correct current selection for a particular job is an important factor in arc welding. With the current set too low, difficulty is experienced in striking and maintaining a stable arc. The electrode tends to stick to the work, penetration is poor and beads with a distinct rounded profile will be deposited. Too high current is accompanied by overheating of the electrode resulting undercut and burning through of the base metal and producing excessive spatter. Normal current for a particular job may be considered as the maximum, which can be used without burning through the work, over-heating the electrode or producing a rough spattered surface.

The table shows current ranges generally recommended for a general purpose type 6013 electrode.

Arc Length

To strike the arc, the electrode should be gently scraped on the work until the arc is established. There is a simple rule for the proper arc length; it should be the shortest arc that gives a good surface to the weld. An arc too long reduces penetration, produces spatter and gives a rough surface finish to the weld. An excessively short arc will cause sticking of the electrode and result in poor quality welds. General rule of thumb for down hand welding is to have an arc length no greater than the diameter of the core wire.

Electrode Angle

The angle that the electrode makes with the work is important to ensure a smooth, even transfer of metal. When welding

in down hand, fillet, horizontal or overhead the angle of the electrode is generally between 5 and 15 degrees towards the direction of travel. When vertical up welding the angle of the electrode should be between 80 and 90 degrees to the work piece.

Travel Speed

The electrode should be moved along in the direction of the joint being welded at a speed that will give the size of run required. At the same time, the electrode is fed downwards to keep the correct arc length at all times. Excessive travel speeds lead to poor fusion, lack of penetration etc, while too slow a rate of travel will frequently lead to arc instability, slag inclusions and poor mechanical properties.

Material and Joint Preparation

The material to be welded should be clean and free of any moisture, paint, oil, grease, mill scale, rust or any other material that will hinder the arc and contaminate the weld material. Joint preparation will depend on the method used include sawing, punching, shearing, machining, flame cutting and others. In all cases edges should be clean and free of any contaminates. The type of joint will be determined by the chosen application.

7-3 GOUGING welding technique guide

Hot current between carbon electrode and metal melts the metal. Meanwhile, high-speed compressed air flow blow off the melting metal. It realizes chipping and cutting for the base metal.

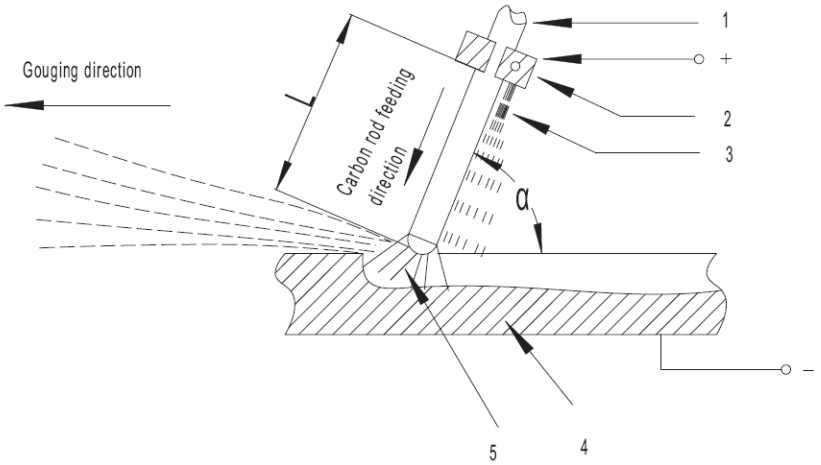

Fig. 7-3-1: CAC-A process

1- Carbon rod 2- Gouging torch chuck 3- Compressed air 4- Work piece 5- Arc L- Carbon rod extension length α-Angle between carbon rod and work piece

Welding parameter for CAC-A and effects

Power source polarity

CAC-A usually choose DC reversed polarity (work piece connect to negative electrode). So the arc is stable, melting metal mobility is better, freezing point is lower, so reversed polarity ensure stable gouging process, arc sends out continuous swish sound, width of dadoing is equal, smooth and bright. If it is wrongly connected, arc is not stable and sends out inconsistently blare sound.

Current and carbon rod diameter

Current is proportional to carbon rod diameter. Generally consult the follow formula to choose current:

$$I=(30\sim 50)D$$

I- Welding current (A)

D- Carbon rod diameter (mm)

For a certain diameter carbon rod, if current is small, then arc is not stable, and carbon inclusion defect occurs easily; increase current appropriately, can improve gouging speed, smooth surface of dadoing, increase its width. In practice, choose larger current generally. But if current is over, carbon rod burns quickly, even melt, cause serious carburize. Diameter chosen for carbon rod is according to dadoing width, the bigger of diameter, and the broader of dadoing is. Generally, diameter is 2~4 mm smaller than dadoing width. Carbon rod standard and suitable current, please refer to the following table:

Table 7-3-1: Carbon rod standard and suitable current

Sectional form shape	Carbon rod standard /mm	Suitable current/A
Round	φ3×355	150～180
	φ4×355	150～200
	φ5×355	150～250
	φ6×355	180～300
	φ7×355	200～350
	φ8×355	250～400
	Φ9×355	350～450
	φ10×355	350～500
Square	3×12×355	200～300
	4×8×355	180～270
	4×12×355	200～400
	5×10×355	300～400
	5×12×355	350～450
	5×15×355	400～500
	5×18×355	450～550
	5×20×355	500～600

Gouging speed

Gouging speed influences dadoing size, surface quality and stability during gouging. Gouging speed should in accordance with current and depth of dadoing (or angle between carbon rod and work piece). If gouging speed is too quick, it is easy to cause short circuit between carbon rod and metal, arc extinguish, carbon inclusion. Usually gouging speed is better around 0.5~1.2m/min.

Pressure of compressed air

Pressure of compressed air can directly influence gouging speed and dadoing surface quality. If pressure is high, can improve gouging speed and dadoing surface smooth degree; if pressure is low, easy to cause slag inclusion on dadoing surface. Usually pressure is 0.4~0.6Mpa. Moisture content and oil content in compressed air can be taken by filter unit installed in compressed air pipeline.

Extension length of carbon rod

Extension length is carbon length from tip to end of carbon rod. In manual CAC-A, extension length is long, tip of compressed air is far from arc, cause lack of wind power, can not blow off slag, and carbon rod is easy to break. Usually extension length is better 80~100mm, along with carbon rod burn, extension length becomes shorter, when extension length decreases to 20~30mm, should adjust it back to 80~100mm.

Angle between carbon rod and work piece

Angle “a” between carbon rod and work piece mainly influences dadoing depth and gouging speed. When angle increases, then gouging depth increases, gouging speed decreases. Usually in manual CAC-A, angle is better around 45°.

Manufacturer

Üretici: Shandong Aotai Electric Co., LTD.
Üretici Adresi: 282 Bole Ave, High-tech Development Zone, Jinan, Shandong 250101, P.R. China
İletişim bilgileri:
Tel: +86-531-81921006
Fax: +86-531-88876665

Importer
İthalatçı: Gedik Kaynak San ve Tic A.Ş.
İthalatçı Adresi: Ankara Cad No: 306 Seyhli 34906 Pendik, İstanbul/Türkiye
İletişim Bilgileri:
Tel: +90-216-3785000
Fax: +90-216 3782044

GeKaMac®

Gedik Welding
Adress : Ankara Caddesi No:306 Seyhli 34906
Pendik - Istanbul / TURKEY
Phone : +90 216 378 50 00 (pbx)
Fax : +90 216 378 20 44
E-mail : gedik@gedik.com.tr